ADVANCED

Lesson 4 - Nodal Analysis Practice Sheet

Not required for the Advanced amateur licence. This material is intended to help the candidate better understand the splitting of currents and voltage drops across resistors and re-enforces Kirchoff's law.

Calculate the following.

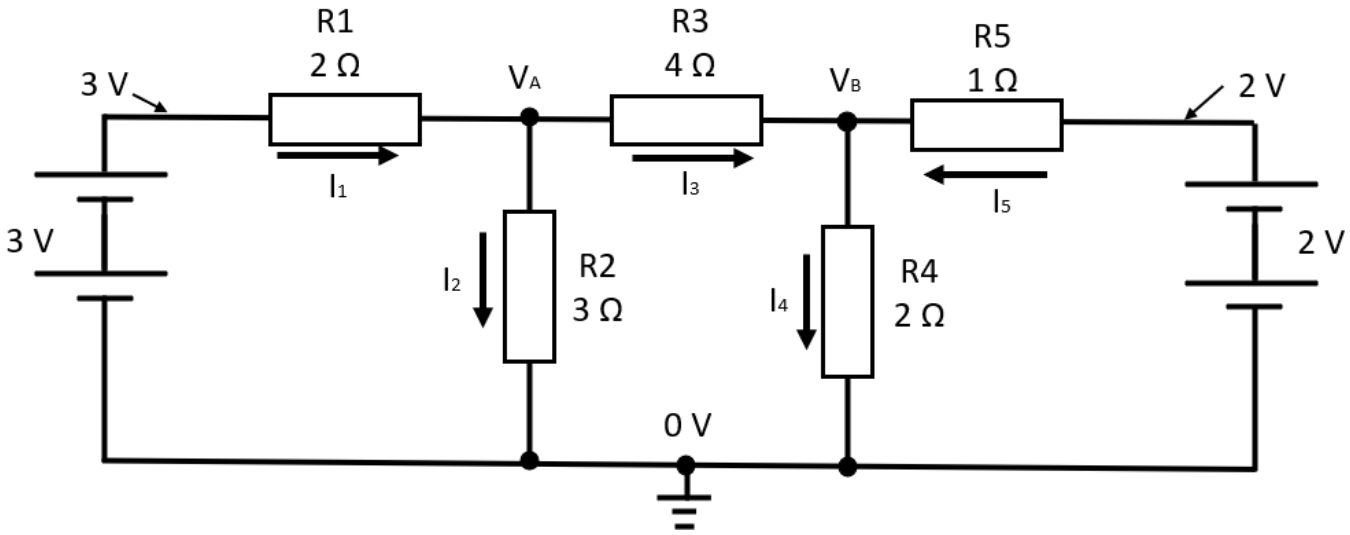

V_A	V_B	V_{R1}	V_{R2}	V_{R3}	V_{R4}	V_{R5}

I_1	I_2	I_3	I_4	I_5

 © Jules Workshop 2024

 © Jules Workshop 2024

Have fun and stay safe.

 © Jules Workshop 2024